MEINBERG

Technical Information

Operating Instruction

TCR510PCI

Impressum

Meinberg Funkuhren GmbH & Co. KG
Auf der Landwehr 22
D-31812 Bad Pyrmont

Telefon: ++49 (0) 52 81 / 9309-0
Telefax: ++49 (0) 52 81 / 9309-30

Internet: **http://www.meinberg.de**
Email: **info@meinberg.de**

March 08, 2006

Table of Contents

Diskette with driver software

Introduction

The transmission of coded timing signals began to take on widespread importance in the early 1950´s. Especially the US missile and space programs were the forces behind the development of these time codes, which were used for the correlation of data. The definition of time code formats was completely arbitrary and left to the individual ideas of each design engineer. Hundreds of different time codes were formed, some of which were standardized by the „Inter Range Instrumantation Group“ (IRIG) in the early 60´s.

Except these „IRIG Time Codes“ other formats, like NASA36, XR3 or 2137, are still in use. The board TCR510PCI however only decodes IRIG-A, IRIG-B or AFNOR NFS 87-500 formats. The AFNOR code is a variant of the IRIG-B format. Within this code the complete date is transmitted instead of the ‘Control Functions’ of the IRIG-telegram.

Description of IRIG-Codes

The specification of individual IRIG time code formats is defined in IRIG Standard 200-98. They are described by an alphabetical character followed by a three-digit number sequence. The following identification is taken from the IRIG Standard 200-98 (only the codes relevant to TCR510PCI are listed):

character	bit rate designation	A	1000 pps
		B	100 pps
1st digit	form designation	0	DC Level Shift width coded
		1	sine wave carrier amplitude modulated
2nd digit	carrier resolution	0	no carrier (DC Level Shift)
		1	100 Hz, 10 msec resolution
		2	1 kHz, 1 msec resolution
		3	10 kHz, 100 µsec resolution
3rd digit	coded expressions	0	BCD, CF, SBS
		1	BCD, CF
		2	BCD
		3	BCD, SBS

BCD: time of year, BCD-coded
CF: Control-Functions (user defined)
SBS: seconds of day since midnight (binary)

IRIG-Standard format

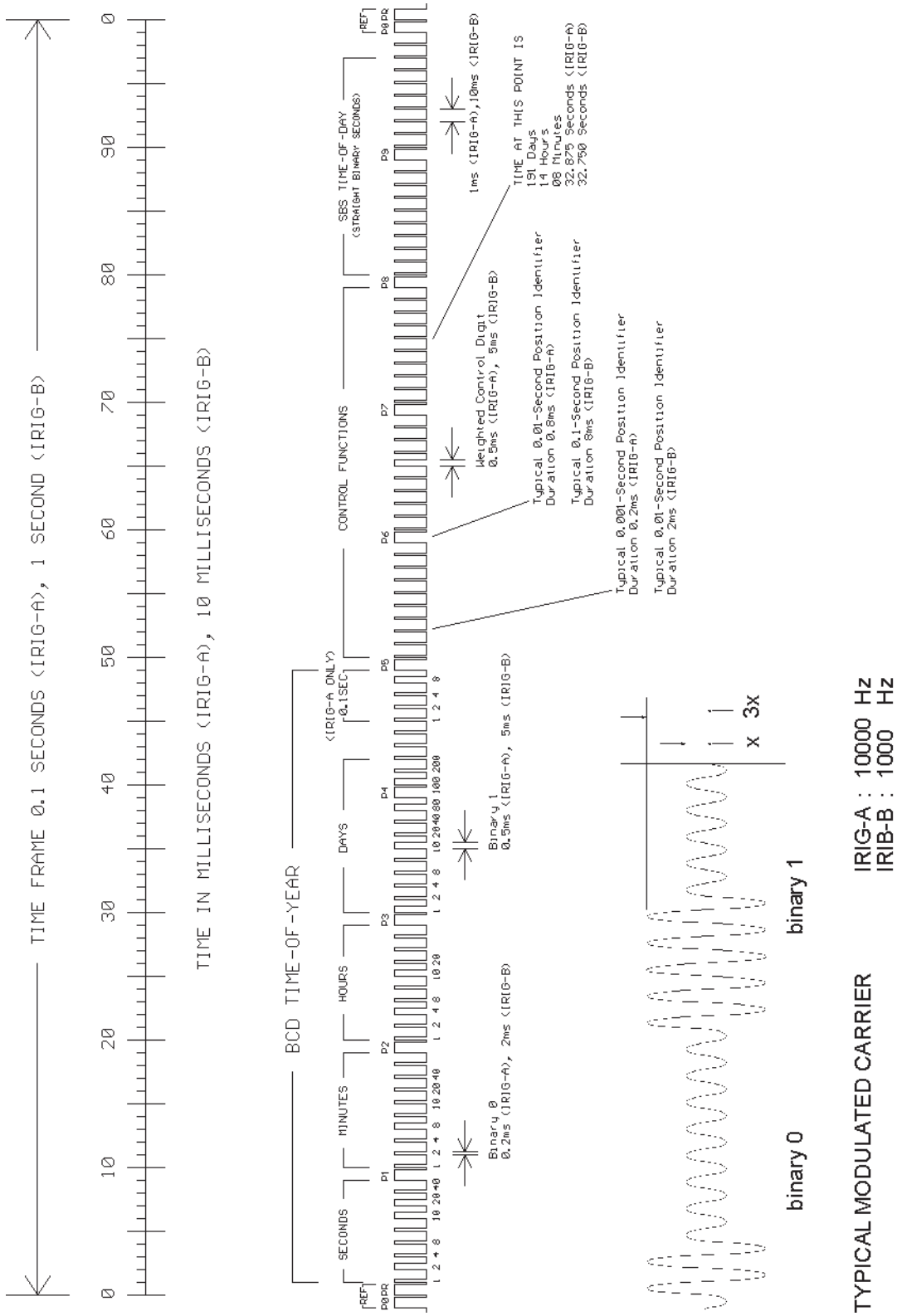

AFNOR-Standard format

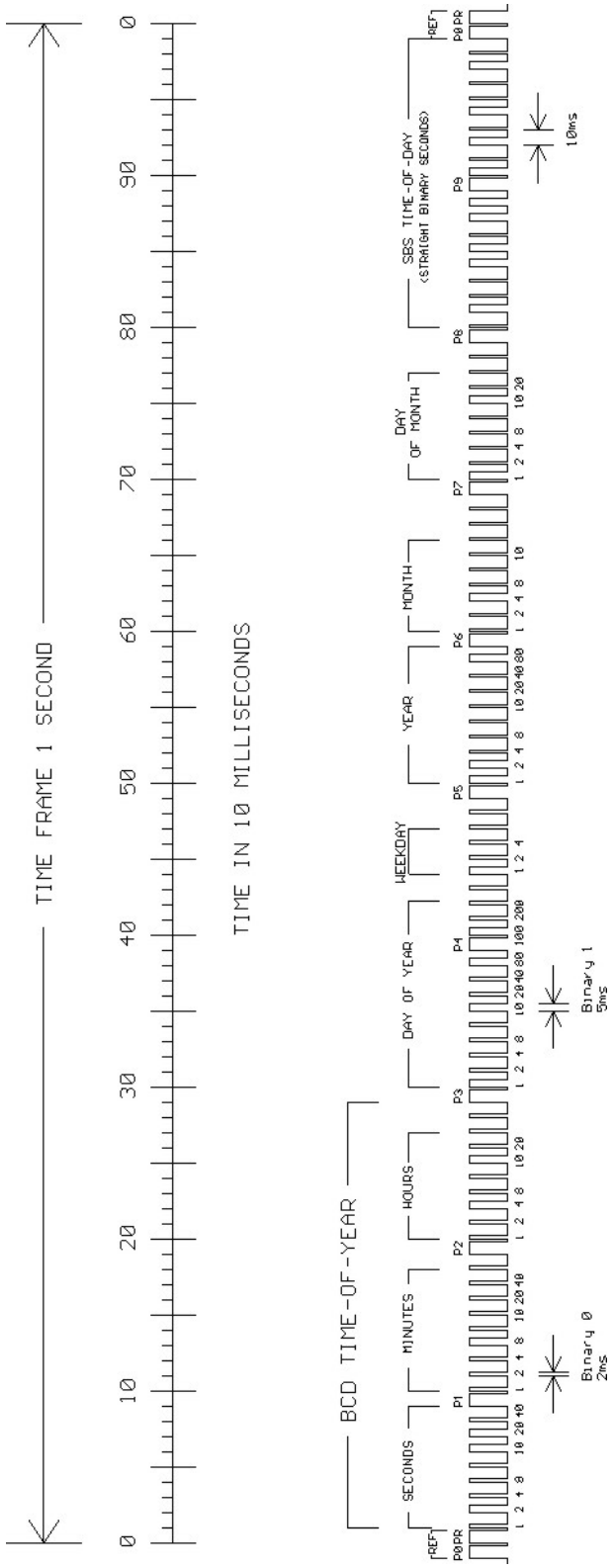

Features TCR510PCI

The board TCR510PCI was developed for computer systems with PCI-bus. It is designed as an universal board and can be used in systems with either 3.3 V or 5 V PCI slots therefore. The module supports clock speeds of 33 MHz and 66 MHz. TCR510PCI serves to receive and decode modulated (AM) and unmodulated (DC Level Shift) IRIG and AFNOR time codes. AM-codes are transmitted by modulating the amplitude of a sine wave carrier, unmodulated codes by variation of the width of pulses.

Automatic gain control within the receive circuit for unmodulated codes allows decoding of IRIG signals with a carrier amplitude of 600 mVpp to 8 Vpp. The input stage is elecctically insulated and has an impedance of 50 Ω, it is accessible via the BNC-connector in the bracket of TCR510PCI.

Unmodulated time codes must be connected to the D-Sub-plug of the module. An onboard photocoupler insulates the internal receive circuit. In delivery state of TCR510PCI the contacts of the D-Sub-plug are not connected to the photocoupler. Two DIP-switches must be set to the 'ON' position for making this connection.

The board TCR510PCI provides a configurable serial interface (RS-232), a pulse per second (PPS) with TTL or RS-232 level and a pulse per minute (PPM) with TTL level. Like the photocoupler, these signals are only connected to the D-Sub-plug after setting DIP-switches into the 'ON' position.

Software running on the computer can read out information regarding date, time and status of the IRIG receiver. Access to the board is made via writing to/reading from I/O ports. It is possible but not necessary to let the board generate periodic hardware interrupts on the computer bus.

Driver software supplied with the board is keeping the computer's system time synchronous to the board time. If the diskette delivered with TCR510PCI doesn't include a driver for the used operating system, it can be downloaded free of charge at:

http://www.meinberg.de/german/sw/

Manuals for the drivers are available at this site also.

The microprocessor system of TCR510PCI is equiped with a Bootstrap-Loader and a Flash-EPROM. These features enable updating of the onboard software via the serial RS-232 interface COM0 by using the Meinberg program 'Flash509'.

Functional description

After the received IRIG code has passed a consistency check, the software clock and the battery backed realtime clock of TCR510PCI are synchronized to the external time reference. If an error in the IRIG telegram is detected, the system clock of the board switches to holdover mode. Drifting of the internal time base and the generated pulses (PPS/PPM) is limited to 1µsec/sec by regulating the onboard quartz of TCR510PCI. IRIG code includes day of year information only. The complete date is kept in the battery backed realtime clock and the software clock therefore. The received day of year is compared to this complete date once per minute. If the board detects a difference between received and stored date information, TCR510PCI switches to holdover mode but still synchronizes the internal time base to the received IRIG code.

Date and time kept in the realtime clock can be set by sending a Meinberg Standard Time Telegram to the serial interface COM0 or via the PCI bus.

The internal system clock is always set to the received IRIG time, which might have a local offset to UTC. Only if TCR510PCI is configured with this offset, Meinberg driver software is able to set the system time of the computer correctly. The serial interface COM0 can send the Standard Meinberg Timestring with UTC or local (IRIG) time.

IRIG telegrams don't include announcers for the change of time zone (daylight saving on/off) or for the insertion of a leap second. Hence the clock will switch into freewheeling mode in case of such event, and resynchronize afterwards.

The board TCR510PCI decodes the following formats:

A133:	1000pps, amplitude modulated sine wave signal, 10 kHz carrier frequency BCD time of year, SBS time of day
A132:	1000pps, amplitude modulated sine wave signal, 10 kHz carrier frequency BCD time of year
A003:	1000pps, DC Level Shift pulse width coded, no carrier BCD time of year, SBS time of day
A002:	1000pps, DC Level Shift pulse width coded, no carrier BCD time of year
B123:	100pps, amplitude modulated sine wave signal, 1 kHz carrier frequency BCD time of year, SBS time of day
B122:	100pps, amplitude modulated sine wave signal, 1 kHz carrier frequency BCD time of year
B003:	100pps,DC Level Shift pulse width coded, no carrier BCD time of year, SBS time of day
B002:	100pps, DC Level Shift pulse width coded, no carrier BCD time of year
AFNOR NFS 87-500:	100pps, amplitude modulated sine wave signal, 1 kHz carrier frequency BCD time of year, complete date, SBS time of day

Pulse outputs

The module TCR510PCI generates pulses at change of second (PPS) and change of minute (PPM). The PPS signal is available with TTL (0/+5V) or RS-232 (-3..12V/ +3..12V) level, the PPM signal with TTL level only. If required, DIP-switches can be set up to direct the pulses to a corresponding pin of the D-Sub-connector in the bracket.

Asynchronous serial port

TCR510PCI provides an asynchronous serial interface (RS-232) called COM0. The serial port sends a Standard Meinberg Time string either once per second, once per minute or on request with ASCII '?' only. The format of this telegram is described in the 'Technical Specifications'. The transmission speed and the framing can be set via the PCI bus by using the shipped monitor software. Furthermore, the serial interface COM0 is used for a potential firmware update.

Connectors and LEDs in the bracket

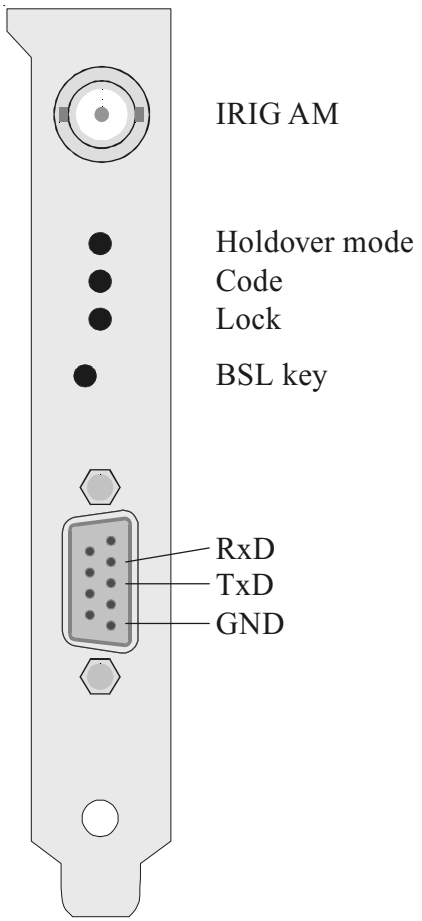

The bracket of the board includes the BNC-connector for the amplitude modulated time codes, three LEDs, a key for activating the Bootstrap-Loader and a 9 pin D-Sub-plug.

The LEDs signal the status of the IRIG receiver. The upper, red LED is switched on whenever the internal timing of TCR510PCI is in holdover mode. This state arises after power up and if an error in the IRIG telegram is detected. This LED changes state only at change of minute.The central, green LED is switched on if the IRIG receiver detects a correct telegram at its input. If the below, green LED (Lock) is switched on, the internal timing of TCR510PCI is synchronized to the received IRIG code by a PLL (**P**hase **L**ocked **L**oop).

Pressing the hidden key BSL is required for activating the Bootstrap-Loader before updating the firmware.

The 9 pin D-Sub-connector is wired to the board's serial port. Pin assignment can be seen from the figure above. This port can **not** be used as serial port for the computer. Instead, the clock uses the port to send out Meinberg's standard time string in order to control an external display or some other external device. The string is sent out once per second, once per minute or if requested by an incoming ASCII '?'. It is also possible to change the board's board time by sending such a string towards the clock. Transmission speed, framing and mode of operation can be modified using the monitor software. The string format is described in the section 'Technical Specifications' at the end of this manual.

Pin assignments of the D-Sub-connector

Only the signals of the serial interface are connected to the D-Sub-plug directly. If another signal shall be connected to a pin of the plug, a DIP-switch must be set to the 'ON' position.

Whenever an additional signal is connected to the rear panel, special care must be taken to the configuration of the cable used with the connector. If pins with TTL level and RS-232 levels are connected to each other, the circuits on the board may be damaged.

Only one of the switches 5 **or** 4 may be put in the 'ON' position to connect the pulse per second with TTL level or with RS-232 level to pin 8 of the plug. The table below shows the pin assignments for the connector and the DIP-switch assigned to each of the signals:

Pin	Signal	SWITCH
1	+ 5V	3
2	RxD in (RS-232)	-
3	TxD out (RS-232)	-
4	PPM out (TTL)	6
5	GND	-
6	+ PWM in	1
7	- PWM in	2
8	PPS out (TTL/RS232)	5/4
9	(reserved)	8

Those signals which do not have DIP-switch assigned are always available at the connector. All DIP-switches not assigned are reserved and should remain in the 'OFF' position.

Putting into operation

To achieve correct operation of the board, the following points must be observed.

Installing the TCR510PCI in your Computer

Every PCI board is a plug&play board. After power-up, the computer's BIOS assigns resources like I/O ports and interrupt lines to the board, the user does not need to take care of the assignments. The programs shipped with the board retrieve the settings from the BIOS.

The computer has to be turned off and its case must be opened. The board can be installed in any PCI slot not used yet. The rear plane must be removed before the board can be plugged in carefully. The computer´s case should be closed again before restarting the computer.

Power supply

All power supplies needed by TCR510PCI are delivered by the PCI bus.

Input signals

Amplitude modulated IRIG-A/B or AFNOR codes must be connected to the BNC-jack in the bracket of TCR510PCI. A shielded or a twisted pair cable should be used.

Pulse width modulated (DC Level Shift) signals are applied by using the D-Sub-plug. Two DIP-switches must be set to the ‘ON’ position for connecting the contacts of the D-Sub with the onboard photocoupler.

The IRIG code used must be configured with the monitor software.

The board TCR510PCI can’t be used to decode amplitude modulated and DC Level Shift signals simultaneously. Depending on the selected code, only the signal at the BNC-jack or the D-Sub connector is decoded.

Input impedance

The IRIG-specification doesn't define values for the output impedance of generators or the input impedance of receivers. This fact led to incompatibility of some modules, because the manufacturers could choose the impedances freely. For example: if the output impedance of the generator is high and the input impedance of the receiver low, the signal level at the receiver input might be too low for correct decoding. Therefore the board TCR510PCI contains a jumper to select the impedance (50 Ω, 600 Ω or 5 kΩ) of the input for modulated codes (BNC) to comply with the requirements of several systems.

Meinberg IRIG-generators have an output impedance of **50 Ω**, to build a matched transmission system when using a coaxial cable. If such a generator is used to synchronize TCR510PCI, the input impedance has to be set to 50 Ω accordingly (default on delivery).

In addition to the telegram, the **AFNOR-code** defines the input/output impedances also. If TCR510PCI is synchronized by this code, an input impedance of **600 Ω** must be set.

The setting „5 kΩ" may be necessary if the generator has a high output impedance (see specifications of manufacturer). The driver software shows a bar chart for evaluation of the signal level at the receiver input.

The following detail of the placeplan of TCR510PCI shows the possible jumper setting with the related input impedance:

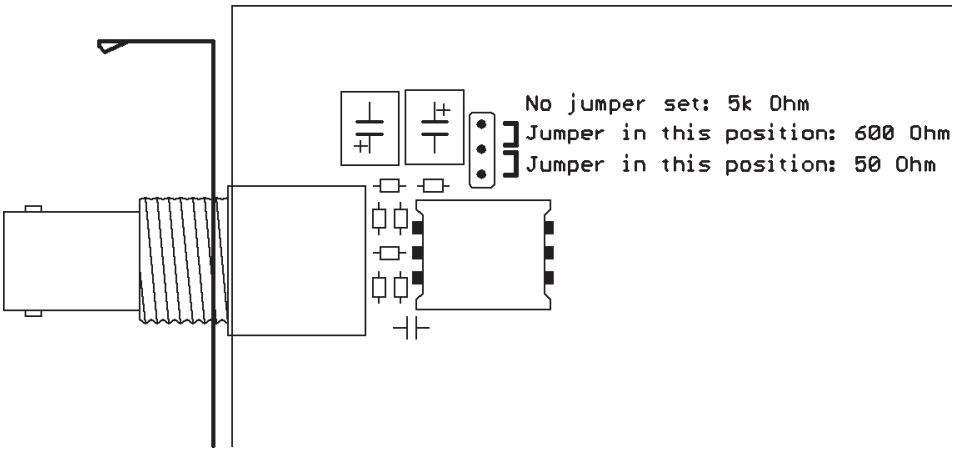

Photocoupler input

Pulse width modulated (DC Level Shift) codes are insulated by an onboard photocoupler. The connection scheme is shown below:

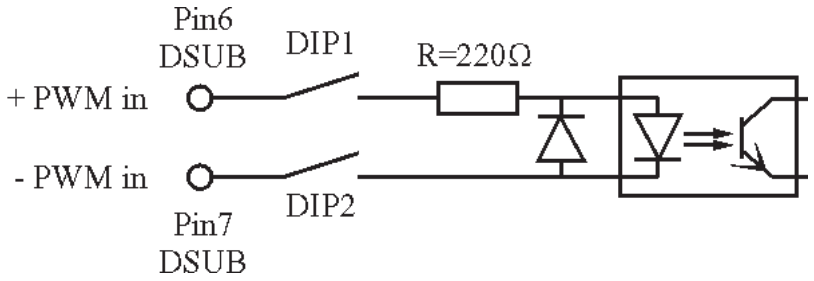

The internal series resistance allows direct connection of input signals with a maximum high level of +12 V (TTL or RS-422 for example). If signals with a higher amplitude are used, an additional external series resistance must be applied for not exceeding the limit of the forward current of the input diode (50 mA). The forward current should not be limited to a value of less than 10 mA to ensure save switching of the photocoupler.

Configuration of TCR510PCI

The selection of the IRIG code, configuration of the serial interface and a possible offset of the received IRIG time to UTC must be set up by the monitor software via the PCI bus. In contrast to AFNOR NFS 87-500 the IRIG telegram containes only the day of year (1...366) instead of a complete date. To ensure correct function of TCR510PCI, the date stored in the realtime clock of the board must be set when using IRIG codes therefore. This setting can be done by a terminal software also.

If the time zone of the received IRIG code is not UTC, the local offset to UTC must be configured to ensure correct function of the driver software. If the local time zone is MEZ for example, the board must be set to a local offset of '+60min' (MEZ = UTC + 1 h).

The serial interface COM0 can be configured to send a time telegram with reference to UTC or to the received local IRIG time.

Firmware Updates

Whenever the on-board software must be upgraded or modified, the new firmware can be downloaded to the internal flash memory via the board's serial port COM0. There is no need to open the computer case and insert a new EPROM.

If the button behind a hole in the rear slot cover is pressed for approximately 2 seconds, a bootstrap loader is activated and waits for instructions from the serial port COM0. A loader program shipped together with the file containing the image of the new firmware sends the new firmware from one of the computer's serial interfaces to the serial port COM0. The bootstrap loader does not depend on the contents of the flash memory, so if the update procedure is interrupted, it can easily be repeated.

The contents of the program memory will not be modified until the loader program has sent the command to erase the flash memory. So if the button has been pressed accidentally, the system will be ready to operate again after the computer has been turned off an the on again.

Replacing the Lithium Battery

The life time of the lithium battery on the board is at least 10 years. If the need arises to replace the battery, the following should be noted:

ATTENTION!

Danger of explosion in case of inadequate replacement of the lithium battery. Only identical batteries or batteries recommended by the manufacturer must be used for replacement. The waste battery must be disposed as proposed by the manufacturer of the battery.

Technical specification TCR510PCI

RECEIVER INPUT:	AM-input (BNC-connector): insulated by a transformer impedance settable 50 Ω, 600 Ω, 5 kΩ input signal: 600 mVpp to 8 Vpp (Mark) other ranges on request DC Level Shift input (D-Sub-connector): insulated by photocoupler internal series resistance: 220 Ω maximum forward current: 50 mA diode vorward voltage: 1.0 V...1.3 V
DECODING:	decoding of the following telegrams possible: IRIG-A133/A132/A003/A002 IRIG-B123/B122/B003/B002 AFNOR NFS 87-500
ACCURACY OF TIME BASE:	+/-5 µsec compared to IRIG reference marker
REQUIRED ACCURACY OF TIME CODE SOURCE:	+/- 100ppm
HOLDOVER MODE:	automatic switching to crystal time base accuracy approximately 1E-6 if decoder has been synchronous for more than 1h
BACKUP-BATTERY:	if the power supply fails, an onboard realtime clock keeps time and date information important system parameters are stored in the RAM of the system lifetime of the Lithium battery at least 10 years
RELIABILITY OF OPERATION:	microprocessor supervisory circuit provides watch dog timer, power supply monitoring and backup-battery switchover software watchdog monitors correct program flow and generates a reset in case of error detection
INITIALIZATION:	software and realtime clock can be set by a serial Meinberg Standard Telegram via COM0 or the PCI bus

OUTPUTS:	pulse per second (PPS): TTL- and RS-232 level positive pulse, pulse duration 200 msec pulse per minute (PPM): TTL level positive pulse, pulse duration 200 msec
SERIAL PORT:	configurable RS-232 interface baudrates: 300 Bd...38400 Bd framing: 7E2, 8N1, 8N2, 8E1 mode of operation: string per second string per minute string on request time telegram: Meinberg Standard Telegram
SYSTEM BUS INTERFACE:	32 Bit, 33 MHz or 66 MHz PCI Bus compatible with PCI and PCI-X specifications
DATA FORMAT:	binary, byte serial
POWER REQUIREMENTS:	+5V, @ 140 mA +12V, @ 15 mA -12V, @ 15mA
BOARD DIMENSIONS:	short, universal board for 3.3V or 5V PCI slot
AMBIENT TEMPERATURE:	0 ... 70°C
HUMIDITY:	max. 85 %

CE Label

This device conforms to the directive 89/336/EWG on the approximation of the laws of the Member States of the European Community relating to electromagnetc compatibility.

Format of the Meinberg Standard Time String

The Meinberg Standard Time String is a sequence of 32 ASCII characters starting with the STX (start-of-text) character and ending with the ETX (end-of-text) character. The format is:

<STX>D:*dd.mm.yy*;T:*w*;U:*hh.mm.ss*;*uvxy*<ETX>

The letters printed in *italics* are replaced by ASCII numbers whereas the other characters are part of the time string. The groups of characters as defined below:

<STX> Start-Of-Text (ASCII code 02h)

dd.mm.yy the current date:

dd	day of month	(01..31)
mm	month	(01..12)
yy	year of the century	(00..99)

w the day of the week (1..7, 1 = Monday)

hh.mm.ss the current time:

hh	hours	(00..23)
mm	minutes	(00..59)
ss	seconds	(00..59, or 60 while leap second)

uv clock status characters:

u: '#' clock has not synchronized after reset
' ' (space, 20h) clock has synchronized after reset

v: different for DCF77 or GPS receivers:

'*' DCF77 clock currently runs on XTAL
GPS receiver has not checked its position

' ' (space, 20h) DCF77 clock is sync'd with transmitter
GPS receiver has determined its position

x time zone indicator:

'U' UTC Universal Time Coordinated, formerly GMT
' ' (space, 20h) local IRIG time

y ' ' (space, 20h)

<ETX> End-Of-Text (ASCII code 03h)