The Synchronization Experts.

TECHNICAL REFERENCE

LANTIME

M150/GPS

April 26, 2023

Meinberg Funkuhren GmbH & Co. KG

Table of Contents

1 Imprint 1

2 Copyright and Liability Exclusion 2

3 Presentation Conventions in this Manual 3
- 3.1 Conventions for the Presentation of Critical Safety Warnings . . . 3
- 3.2 Secondary Symbols Used in Safety Warnings . . . 3
- 3.3 Conventions for the Presentation of Other Important Information . . . 4
- 3.4 Generally Applicable Symbols . . . 4

4 Important Safety Information 5
- 4.1 Appropriate Usage . . . 5
- 4.2 Product Documentation . . . 6
- 4.3 Safety when Installing the Device . . . 7
- 4.4 Electrical Safety . . . 8
  - 4.4.1 Special Information for Devices with AC Power Supply . . . 10
  - 4.4.2 Special Information for Devices with DC Power Supply . . . 10
- 4.5 Safety when Maintaining and Cleaning the Device . . . 11
- 4.6 Battery Safety . . . 11

5 Important Product Information 12
- 5.1 CE Marking . . . 12
- 5.2 UKCA Marking . . . 12
- 5.3 Ensuring the Optimum Operation of Your Device . . . 12
- 5.4 Maintenance and Modifications . . . 13
  - 5.4.1 Replacing the Battery . . . 13
  - 5.4.2 Replacing the Fuse . . . 14
- 5.5 Disposal . . . 15

6 Introduction to Your LANTIME Server 16

7 Installation of the GPS Antenna 17

8 Connecting Your LANTIME System 22

9 Configuring your LANTIME System for Your Network 23

10 M150 - Front Connectors 25
- 10.1 AC/DC Power Connector . . . 27
- 10.2 DC Power Connector . . . 28
- 10.3 Fuse . . . 29
- 10.4 Status LEDs of the Receiver . . . 30
- 10.5 Terminal . . . 31
- 10.6 USB Port . . . 31
- 10.7 Antenna Input: GPS Reference Clock . . . 32
- 10.8 1000BASE-T Gigabit Network Port . . . 33

11 Technical Appendix 34
- 11.1 Technical Specifications: LANTIME Chassis . . . 34
- 11.2 Technical Specifications: GPS Antenna and Accessories . . . 37
- 11.3 Technical Specifications: MBG S-PRO Surge Protector . . . 38
  - 11.3.1 MBG S-PRO: Physical Dimensions . . . 40

11.3.2 Installation and Grounding 40
11.4 Technical Specifications: Antenna Cable 40
11.5 How Satellite Navigation Works 41
11.5.1 Time Zones and Daylight Saving Time 41

12 RoHS Conformity 42

13 Declaration of Conformity for Operation in the European Union 43

14 Declaration of Conformity for Operation in the United Kingdom 45

1 Imprint

Meinberg Funkuhren GmbH & Co. KG
Lange Wand 9, 31812 Bad Pyrmont, Germany

Phone: + 49 (0) 52 81 / 93 09 - 0
Fax: + 49 (0) 52 81 / 93 09 - 230

Website: https://www.meinbergglobal.com
Email: info@meinberg.de

Date: April 26, 2023

2 Copyright and Liability Exclusion

At the time of writing of this document, reasonable effort was made to carefully review links to third-party websites to ensure that they were compliant with the laws of the Federal Republic of Germany and relevant to the subject matter of the document. Meinberg accepts no liability for the content of websites not created or maintained by Meinberg, and does not warrant that the content of such external websites is suitable or correct for any given purpose.

While Meinberg makes every effort to ensure that this document is complete, suitable for purpose, and free of material errors or omissions, and periodically reviews its library of manuals to reflect developments and changing standards, Meinberg does not warrant that this specific document is up-to-date, comprehensive, or free of errors. Updated manuals are provided at **www.meinbergglobal.com**.

You may also write to **techsupport@meinberg.de** to request an updated version at any time or provide feedback on errors or suggested improvements, which we are grateful to receive.

Meinberg reserves the right to make changes of any type to this document at any time as is necessary for the purpose of improving its products and services and ensuring compliance with applicable standards, laws & regulations.

3 Presentation Conventions in this Manual

3.1 Conventions for the Presentation of Critical Safety Warnings

Warnings are indicated with the following warning boxes, using the following signal words, colors, and symbols:

Caution!

This signal word indicates a hazard with a **low risk level**. Such a notice refers to a procedure or other action that may result in **minor injury** if not observed or if improperly performed.

Warning!

This signal indicates a hazard with a **medium risk level**. Such a notice refers to a procedure or other action that may result in **serious injury** or even **death** if not observed or if improperly performed.

Danger!

This signal word indicates a hazard with a **high risk level**. Such a notice refers to a procedure or other action that will very likely result in **serious injury** or even **death** if not observed or if improperly performed.

3.2 Secondary Symbols Used in Safety Warnings

Some warning boxes may feature a secondary symbol that emphasizes the defining nature of a hazard or risk.

The presence of an "electrical hazard" symbol is indicative of a risk of electric shock or lightning strike.

The presence of a "fall hazard" symbol is indicative of a risk of falling when performing work at height.

Das Symbol "laser hazard" symbol is indicative of a risk relating to laser radiation.

3.3 Conventions for the Presentation of Other Important Information

Beyond the above safety-related warning boxes, the following warning and information boxes are also used to indicate risks of product damage, data loss, and information security breaches, and also to provide general information for the sake of clarity, convenience, and optimum operation:

Important!

Warnings of risks of product damage, data loss, and also information security risks are indicated with this type of warning box.

Information:

Additional information that may be relevant for improving efficiency or avoiding confusion or misunderstandings is provided in this form.

3.4 Generally Applicable Symbols

The following symbols and pictograms are also used in a broader context in this manual and on the product.

The presence of the "ESD" symbol is indicative of a risk of product damage caused by electrostatic discharge.

Direct current (DC) *(symbol definition IEC 60417-5031)*

Alternating current (AC) *(symbol definition IEC 60417-5032)*

Ground connection *(symbol definition IEC 60417-5017)*

Protective earth connection *(symbol definition IEC 60417-5019)*

4 Important Safety Information

The safety information provided in this chapter as well as specific safety warnings provided at relevant points in this manual must be observed during every installation, set-up, and operation procedure of the device, as well as its removal from service.

Any safety warnings affixed to the device itself must also be observed.

Any failure to observe this safety information, these safety warnings, and other safety-critical operating instructions in the product documentation, or any other improper usage of the device may result in unpredictable behavior from the product, and may result in injury or death.

Depending on your specific device configuration and installed options, some safety information may not be applicable to your device.

Meinberg accepts no responsibility for injury or death arising from a failure to observe the safety information, warnings, and safety-critical instructions provided in the product documentation.

It is the responsibility of the operator to ensure that the product is safely and properly used.

Should you require additional assistance or advice on safety-related matters for your product, Meinberg's Technical Support team will be happy to assist you at any time. Simply send a mail to **techsupport@meinberg.de**.

4.1 Appropriate Usage

The device must only be used appropriately in accordance with the specifications of the product documentation! Appropriate usage is defined exclusively by this manual as well as any other relevant documentation provided directly by Meinberg.

Appropriate usage includes in particular compliance with specified limits! The device's operating parameters must never exceed or fall below these limits!

4.2 Product Documentation

The information in this manual is intended for readers with an appropriate degree of safety awareness. The following are deemed to possess such an appropriate degree of safety awareness:

- skilled persons with a familiarity with relevant national safety standards and regulations,
- instructed persons having received suitable instruction from a skilled person on relevant national safety standards and regulations

If there is any safety information in the product documentation that you do not understand, **do not** continue with the set-up or operation of the device!

Read the product manual carefully and completely before you set the product up for use.

Safety standards and regulations change on a regular basis and Meinberg updates the corresponding safety information and warnings to reflect these changes. It is therefore recommended to visit the Meinberg website at **https://www.meinbergglobal.com** regularly to download up-to-date manuals.

Please keep all product documentation, including this manual, in a safe place in digital or printed format to ensure that it is always easily accessible.

Meinberg's Technical Support team is also always available at **techsupport@meinberg.de** if you require additional assistance or advice on safety aspects of your system.

4.3 Safety when Installing the Device

This rack-mounted device has been designed and tested in accordance with the requirements of the standard IEC 62368-1 (*Audio/Video, Information and Communication Technology Equipment—Part 1: Safety Requirements*). Where the rack-mounted device is to be installed in a larger unit (such as an electrical enclosure), additional requirements in the IEC 62368-1 standard may apply that must be observed and complied with. General requirements regarding the safety of electrical equipment (such as IEC, VDE, DIN, ANSI) and applicable national standards must be observed in particular.

The device has been developed for use in industrial or home environments and may only be used in such environments. In environments at risk of high environmental conductivity ("high pollution degree" according to IEC 60664-1), additional measures such as installation of the device in an air-conditioned electrical cabinet may be necessary.

If the unit has been brought into the usage area from a cold environment, condensation may develop; in this case, wait until the unit has adjusted to the temperature and is completely dry before setting it up.

When unpacking & setting up the equipment, and before operating it, be sure to read the information on installing the hardware and the specifications of the device. These include in particular dimensions, electrical characteristics, and necessary environmental conditions.

Fire safety standards must be upheld with the device in its installed state.

The device with the highest mass should be installed at the lowest position in the rack in order to position the center of gravity of the rack as a whole as low as possible and minimize the risk of the rack tipping over. Further devices should be installed from the bottom, working your way up.

The device must be protected against mechanical & physical stresses such as vibration or shock.

Never drill holes into the device to mount it! If you are experiencing difficulties with rack installation, contact Meinberg's Technical Support team for assistance!

Inspect the device housing before installation. The device housing must be free of any damage when it is installed.

4.4 Electrical Safety

This Meinberg product is operated at a hazardous voltage.

This system may only be set up and connected by a skilled person, or by an instructed person who has received appropriate technical & safety training from a skilled person.

Custom cables may only be assembled by a qualified electrician.

Never work on cables carrying a live current!

Never use cables or connectors that are visibly damaged or known to be defective! Faulty, defective, or improperly connected shielding, connectors, or cables present a risk of injury or death due to electric shock and may also constitute a fire hazard!

Before operating the device, check that all cables are in good order. Ensure in particular that the cables are undamaged (for example, kinks), that they are not wound too tightly around corners, and that no objects are placed on the cables.

Cables must be laid in such a way that they do not present a tripping hazard.

The power supply should be connected using a short, low-inductance cable. Avoid the use of power strips or extension cables if possible. If the use of such a device is unavoidable, ensure that it is expressly rated for the rated currents of all connected devices.

Never connect or disconnect power, data, or signal cables during a thunderstorm! Doing so presents a risk of injury or death, as cables and connectors may conduct very high voltages in the event of a lightning strike!

The device cables must be connected or disconnected in the order specified in the user documentation for the device. Connect all cables only while the device is de-energized before you connect the power supply.

Always pull cable connectors out at both ends before performing work on connectors! Improperly connecting or disconnecting this Meinberg system may result in electric shock, possibly resulting in injury or death!

When pulling out a connector, **never** pull on the cable itself! Pulling on the cable may cause the plug to become detached from the connector or cause damage to the connector itself. This presents a risk of direct contact with live components.

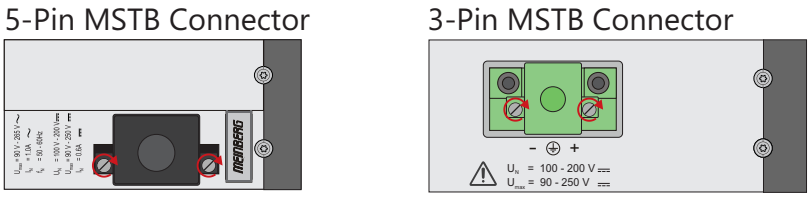

Fig.: Lock screws on an MSTB plug connector; in this case on a LANTIME M320

Ensure that all plug connections are secure. In particular, when using plug connectors with lock screws, ensure that the lock screws are securely tightened. This is especially important for power supply connectors where 3-pin or 5-pin MSTB connectors with lock screws are used (see illustration).

Before the device is connected to the power supply, the device housing must be grounded by connecting a grounding conductor to the grounding terminal of the device.

When installing the device in an electrical enclosure, it must be ensured that adequate clearance is provided, minimum creepage distances to adjacent conductors are maintained, and that there is no risk of short circuits.

Protect the device from the ingress of objects or liquids!

If the device malfunctions or requires servicing (for example, due to damage to the housing, power supply cable, or the ingress of liquids or objects), the power supply may be cut off. In this case, the device must be isolated immediately and physically from all power supplies! Electrical isolation must be performed and confirmed in accordance with the following procedure:

- Pull the power supply plug from the power supply.
- Loosen the locking screws of the MSTB power supply plug on the device and pull it out of the device.
- Contact the person responsible for your electrical infrastructure.
- If your device is connected to one or more uninterruptible power supplies (UPS), the direct power supply connection between the device and the UPS solution must be first be disconnected.

4.4.1 Special Information for Devices with AC Power Supply

This device is a Protection Class 1 device and may only be connected to a grounded outlet (TN system).

For safe operation, the installation must be protected by a fuse rated for currents not exceeding 20 A and equipped with a residual-current circuit breaker in accordance with applicable national standards.

The appliance must only ever be disconnected from the mains power supply via the mains socket and not from the appliance itself.

Make sure that the mains socket on the appliance or the mains socket of the house installation is readily accessible for the user so that the mains cable can be pulled out of the socket in an emergency.

Non-compliant cabling or improperly grounded sockets are an electrical hazard!

Only connect the appliance to a grounded shockproof socket using a safety-tested mains cable designed for use in the country of operation.

4.4.2 Special Information for Devices with DC Power Supply

In accordance with IEC 62368-1, it must be possible to disconnect the appliance from the supply voltage from a point other than the appliance itself (e.g., from the primary circuit breaker).

The power supply plug may only be fitted or dismantled while the appliance is isolated from the power supply (e.g., disconnected via the primary circuit breaker).

Power supply cables must have adequate fuse protection and have an adequate wire gauge size (1 mm^2 — 2.5 mm^2 / 17 AWG — 13 AWG)

The power supply of the device must have a suitable on-demand disconnection mechanism (i.e., a switch). This disconnection mechanism must be readily accessible in the vicinity of the appliance and marked accordingly as a cut-off mechanism for the appliance.

4.5 Safety when Maintaining and Cleaning the Device

Only use a soft, dry cloth to clean the device.

Never use liquids such as detergents or solvents to clean the device! The ingress of liquids into the device housing may cause short circuits in the electronic circuitry, which in turn can cause a fire or electric shock!

Neither the device nor its individual components may be opened. The device or its components may only be repaired by the manufacturer or by authorized personnel. Improperly performed repairs can put the user at significant risk!

In particular, **never** open a power supply unit or module, as hazardous voltages may be present within the power supply device even after it is isolated from the upstream voltage. If a power supply unit or module is no longer functional (for example due to a defect), it can be returned to Meinberg for repair.

Some components of the device may become very hot during operation. Do not touch these surfaces!

If maintenance work is to be performed on the device and the device housing is still hot, switch off the device beforehand and allow it to cool.

4.6 Battery Safety

The CR2032 lithium battery on the receiver module has a service life of at least 10 years.

Should it be necessary to replace the battery, please note the following:

- The battery may only be replaced by the same type or a comparable type recommended by the manufacturer.
- The battery may only be replaced by the manufacturer or authorized personnel.
- The battery must not be exposed to air pressure levels outside of the limits specified by the manufacturer.

Improper handling of the battery may result in the battery exploding or in leakages of flammable or corrosive liquids or gases.

- Never short-circuit the battery!
- Never attempt to recharge the battery!
- Never throw the battery in a fire or dispose of it in an oven!
- Never dispose of the battery in a mechanical shredder!

5 Important Product Information

5.1 CE Marking

This product bears the CE mark as is required to introduce the product into the EU Single Market.

The use of this mark is a declaration that the product is compliant with all requirements of the EU directives effective and applicable as at the time of manufacture of the product. These directives are listed in the EU Declaration of Conformity, appended to this manual as Chapter 13.

5.2 UKCA Marking

This product bears the British UKCA mark as is required to introduce the product into the United Kingdom (excluding Northern Ireland, where the CE marking remains valid).

The use of this mark is a declaration that the product is in conformity with all requirements of the UK statutory instruments applicable and effect as at the time of manufacture of the product. These statutory instruments are listed in the UK Declaration of Conformity, appended to this manual as Chapter 14.

5.3 Ensuring the Optimum Operation of Your Device

- Ensure that ventilation slots are not obscured or blocked by dust, otherwise heat may build up inside the device. While the system is designed to shut down automatically in the event of temperature limits being exceeded, the risk of malfunctions and product damage following overheating cannot be entirely eliminated.
- The device is only deemed to be appropriately used and EMC limits (electromagnetic compatibility) are only deemed to be complied with while the device housing is fully assembled in order to ensure that requirements pertaining to cooling, fire safety, electrical shielding and (electro)magnetic shielding are upheld.

5.4 Maintenance and Modifications

Important!

Before performing any maintenance work on or authorized modification to your Meinberg system, we recommend making a backup of any stored configuration data (e.g., to a USB flash drive from the Web Interface).

5.4.1 Replacing the Battery

Your device's receiver module is fitted with a lithium battery (type CR2032).

This battery has a life of at least ten years. However, if the device develops the following unexpected behaviors, the voltage of the battery may have dropped below 3 V, and the battery needs to be replaced as a result:

- The reference clock has the wrong date or wrong date when the system is started.
- The reference clock repeatedly starts in Cold Boot mode (i.e., upon starting, the system has no ephemeris data saved whatsoever, resulting in the synchronization process taking a very long time due to the need to rediscover all of the visible satellites).
- Some configuration options relating to the reference clock are lost every time the system is restarted.

In this case you should not replace the battery on your own. Please contact the Meinberg Technical Support team, you will provide you with precise guidance on how to perform the replacement.

5.4.2 Replacing the Fuse

Danger!

This equipment is operated at a hazardous voltage.

Danger of death from electrical shock!

The device must be disconnected from the mains! This is done using the physical power switch. Once the power switch is OFF, release the lock screws of the power supply connector and detach the connector.

- Disconnect all signal cables from the device, including antenna, fault message relay contact cables, and interfaces.
- Replace the fuse.
- Reconnect all cables in the reverse order to how they were disconnected. The power can now be switched back on if appropriate.

Fuses carry standardized markings that provide information on their specifications. For example, a fuse that carries the marking ***T 2.5 A H 250 V*** has the following meaning:

- Trigger Speed: T (slow-blow)
- Rated Current A: 2.5 ampere
- Fuse Break Capacity: H (high)
- Max. Voltage: 250 V

Fuse replacement for AC power supply
Important: The fuse must be approved for use with AC voltages!

Fuse Type: :
- T $_{\text{Current}}$ A / $_{\text{Voltage}}$ V in accordance with IEC 60127
- with or without cooling material
- T = “Träge” (slow-blow) / SB = Slow-blow
- Dimensions: 5 x 20 mm

Fuse replacement for DC power supply
Important: The fuse must be approved for use with DC voltages!

Fuse Type:
- T $_{\text{Current}}$ A / $_{\text{Voltage}}$ V in accordance with IEC 60127
- with cooling material
- T = “Träge” (slow-blow) / SB = Slow-blow
- Dimensions: 5 x 20 mm

Caution!

Ensure that a spare fuse is to hand, and ensure that it is of the proper type and has the appropriate current rating and blow curve.

5.5 Disposal

Disposal of Packaging Materials

The packaging materials that we use are fully recyclable:

Material	Use for	Disposal
Polystyrene	Packaging frame/filling material (e.g., polystyrene peanuts)	Recycling Depot
PE-LD (Low-density polyethylene)	Accessories packaging, bubble wrap	Recycling Depot
Cardboard	Shipping packaging, accessories packaging	Paper Recycling

For information on the proper disposal of packaging materials in your specific country, please inquire with your local waste disposal company or authority.

Disposal of the Device

This product falls under the labeling obligations of the Waste Electrical and Electronic Equipment Directive 2012/19/EU ("*WEEE Directive*") and thus bears this WEEE symbol. The presence of this symbol indicates that this electronic product may only be disposed of in accordance with the following provisions.

Important!

Do not dispose of the product or batteries via the household waste. Inquire with your local waste disposal company or authority on how to best dispose of the product or battery if necessary.

This product is considered to be a "**B2B**" product for the purposes of the WEEE Directive and is also classified as "**IT and Telecommunications Equipment**" in accordance with Annex I of the Directive.

It can be returned to Meinberg for disposal. In this case, the shipping costs are to be borne by the customer, while Meinberg will cover the costs for disposal. If you wish for Meinberg to handle disposal for you, please get in touch with us. Otherwise, please use the return and collection systems provided within your country to ensure that your device is disposed of in a compliant fashion to protect the environment and conserve valuable resources.

Disposal of Batteries

Please consult your local waste disposal regulations for information on the correct disposal of batteries as hazardous waste.

6 Introduction to Your LANTIME Server

Thank you for purchasing your new LANTIME time server.

Meinberg's **LANTIME** Series M servers rely on proven, robust, and resilient technology to provide an absolute and highly precise NTP time reference in a variety of chassis types, whether for rack installation, DIN rail mounting, or desktop use.

The use of the NTP protocol allows LANTIME servers to be integrated into existing TCP/IP networks without the need to invest in additional network hardware, while maximizing the accuracy potential of this tried and trusted synchronization protocol, which has been a mainstay of computer networks for over 40 years.

If equipped with a receiver for a Stratum 0 time signal and correctly connected to directly receive such a signal, LANTIME servers can operate as Stratum 1 NTP servers, capable of serving extremely accurate time to over 25,000 NTP clients per second with accuracies of just a few milliseconds. LANTIME servers can be equipped with a variety of integrated receivers for Stratum 0 time reference sources, including the GPS, Galileo, BeiDou, and GLONASS satellite constellations, or long-wave radio signals (DCF77, MSF).

LANTIME servers feature a custom Linux-based operating system that has been specifically developed by Meinberg for timing & synchronization applications. This operating system is regularly updated by Meinberg's software developers with bugfixes, security fixes, and new features. Updates are provided free of charge for the lifetime of your Meinberg server.

The primary user interface of your LANTIME server is the fully-featured Web Interface, which provides a multitude of configuration and monitoring options. It also features the ability to connect to the device's command-line interface via SSH, Telnet, or a direct wired terminal connection.

This Technical Reference only provides initial guidance on setting up your LANTIME system for use. To achieve optimum results with your LANTIME server, we recommend carefully studying the LANTIME OS manual, which is available to download at **http://www.mbg.link/docg-fw-ltos**.

7 Installation of the GPS Antenna

Danger!

Do not mount the antenna without an effective fall arrester!

Danger of death from falling!

- Ensure that you work safely when installing antennas!
- Never work without an effective fall arrester!

Danger!

Do not work on the antenna system during thunderstorms!

Danger of death from electric shock!

- Do not carry out any work on the antenna system or the antenna cable if there is a risk of lightning strike.
- Do not carry out any work on the antenna system if it is not possible to maintain the prescribed safe distance to exposed lines and electrical substations.

Selecting the Antenna Location

To avoid difficulties with synchronization, select a location that allows for an unobstructed view of the sky so as to ensure that enough satellites can be found. The line of sight between the antenna and satellites should not be obstructed in any way. The antenna must also not be installed under power lines or other electrical lighting or power circuits.

Installation Conditions for Optimum Operation:

- clear view of 8° above the horizon or
- clear view towards equator (if clear view of 8° not possible) or
- clear view between 55th north and 55th south parallels (satellite orbits).

Information:

Problems may arise if all of these views are obstructed, as four satellites must be located to calculate a new position.

Important Information Regarding Surge Protection

The following illustration is a visual representation of where there is a risk of hazardous voltage surges in the cable route (from antenna to Meinberg system). The examples below explain how you can protect your Meinberg system from these.

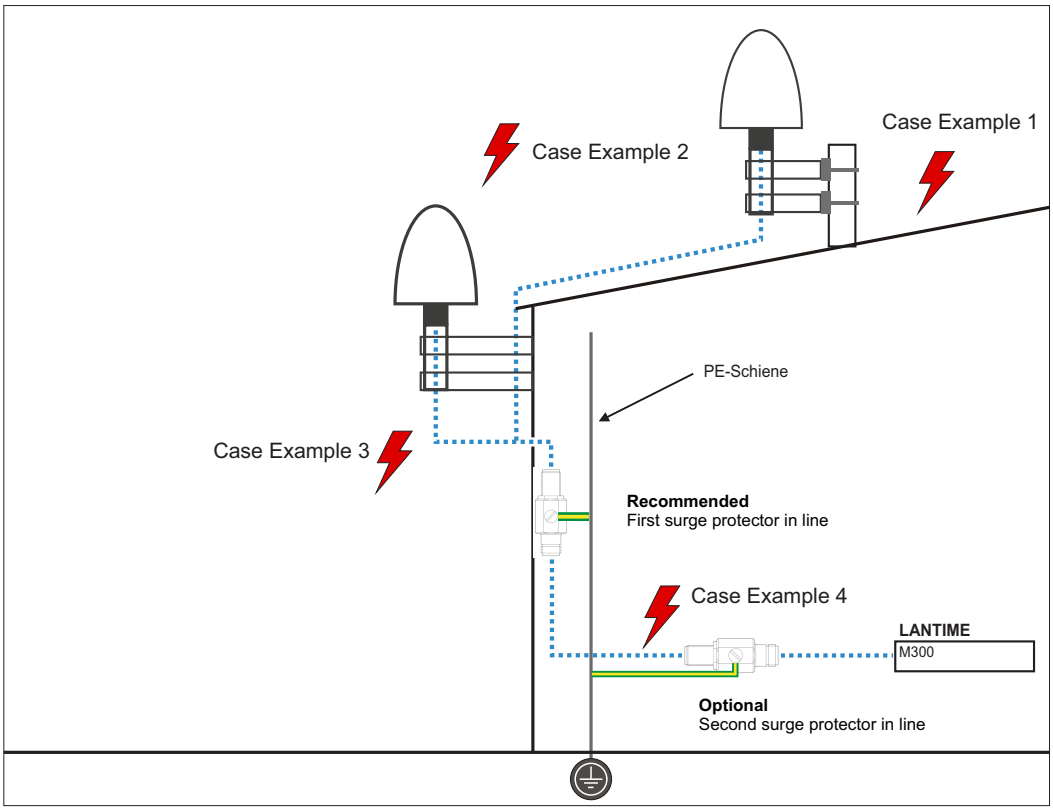

Case Example 1:
An indirect lightning strike near the antenna or coaxial cable may induce transient voltages ("spikes" or "surges"). These spikes can be carried via the coaxial cable to the inside of the building and consequently to the system's receiver. It is therefore strongly recommended to have the surge protector installed at the point directly after the cable enters the building.

Case Example 2:
If the length of the coaxial cable between the antenna and point of entry into the building is rather long (e.g., 10 meters), there is a greater risk of transient voltages being introduced into the antenna cable as a result of lightning strike. So the installation of a surge protector immediately after the point of entry into the building is also strongly recommended here.

Case Example 3:
If the cable leading from the point of entry into the building to the Meinberg system is laid together with other cables (for example in a cable duct alongside high-voltage cables), transient voltages may "leak" into the antenna cable, causing damage to your system. To prevent this, a second surge protector can optionally be installed in the line just before the device.

Mounting the Antenna

1.

Use the included mounting kit to mount the antenna at a distance of 50 cm from other antennas, either on a vertical pole of a diameter of no more than 60 mm, or directly onto a wall.

The antenna cable should then be connected to the Type-N connector of the antenna. Feed the other end of the cable into the building through the wall.

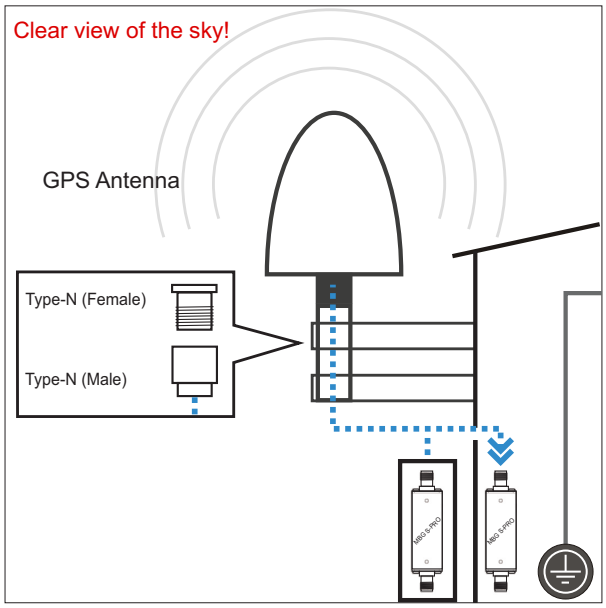

Information:

Make sure that the maximum cable length is not exceeded when installing the antenna cable between the antenna and receiver. The maximum length will depend on the type of cable used (RG213, RG58) and its attenuation factor.

2.

Voltage surges (e.g., caused by lightning strike) may be transmitted along the antenna cable and cause damage to the receiver. Using a MBG S-PRO surge protector can help to protect your receiver against such surges.

If installed in a waterproof enclosure, the MBG S-PRO can be installed outdoors. However, Meinberg recommends installing the surge protector indoors—as closely to the entrance point of the antenna cable as possible—in order to minimize the risk of surge damage (such as that caused by lightning strike).

Connect the other end of the antenna cable to the female connector of the surge protector.

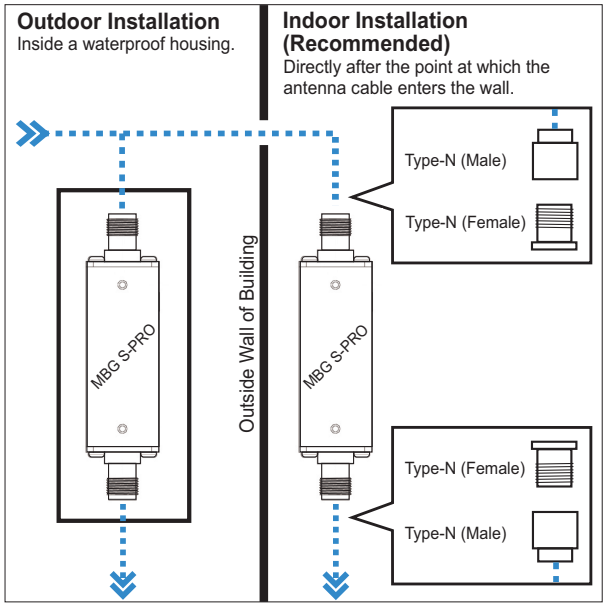

3.

To ground the antenna cable, connect the surge protector to a grounding busbar using a grounding conductor (see illustration).

Once installation is complete, connect the other end of the antenna cable to the surge protector female connector.

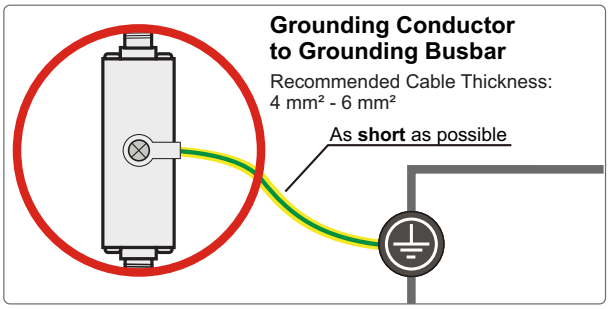

4.

The next step is to connect the supplied coaxial cable from the surge protector to the receiver.

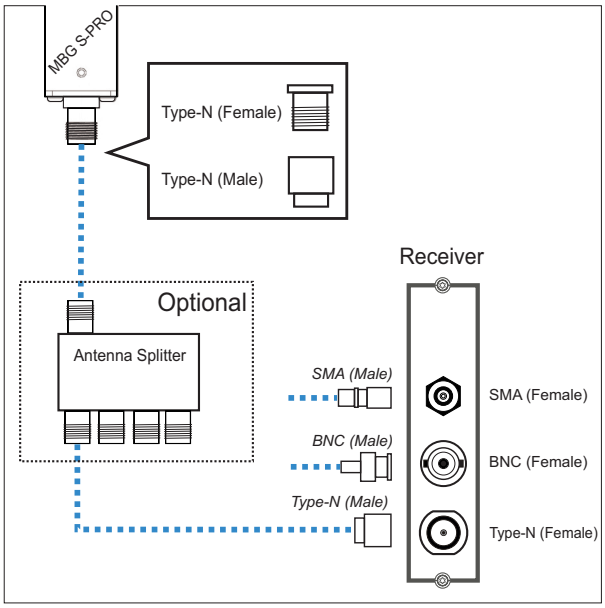

Optional Antenna Splitter

Multiple receivers can be connected to one antenna using the antenna splitter. When doing so, be aware that the total distance, comprising the cable from the antenna to the splitter, and from there to the receiver, must not exceed the maximum cable length. The splitter may be installed at any location between the surge protector and the receivers.

Information:

Please note for installation purposes that GNSS L1 components cannot be directly connected to or used with a Meinberg GPS antenna distributor.

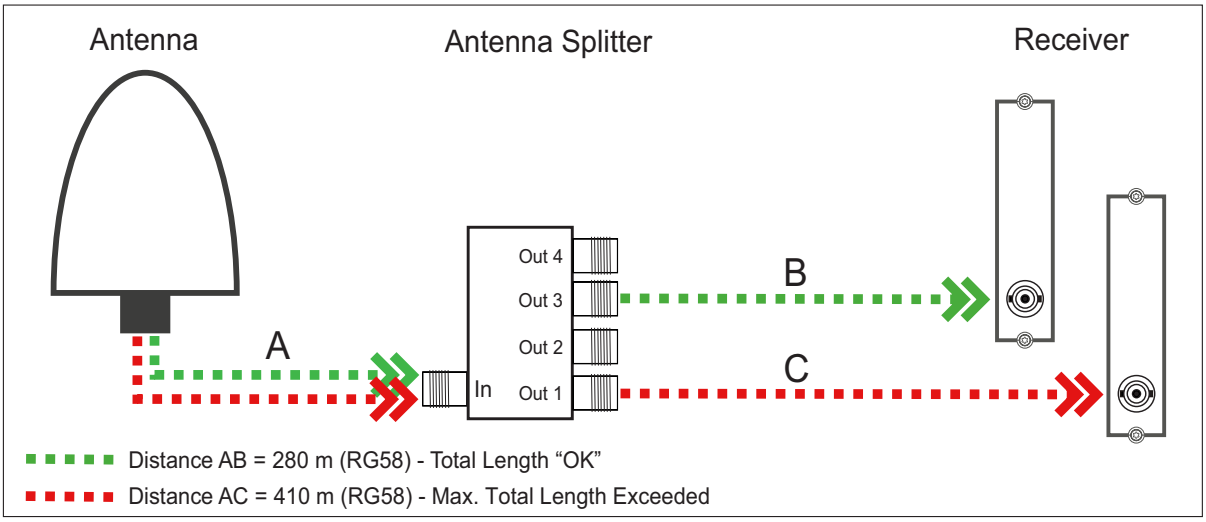

Compensating for Signal Propagation Delay in the Antenna Cable

To enable the connected receiver to compensate for the signal propagation delay inherent in the antenna cable, you will need to enter either the length of your antenna cable in meters or the offset time in nanoseconds into your receiver.

Antenna Cable Length (m):
The satellite signal reception is delayed as a result of coaxial cable used.

Cable	Delay	Usage
RG58U	5 ns/m	For GPS and GNS-UC receivers
H155	4 ns/m	For GNS and GNM receivers

The cable length entered (from antenna to receiver) is used by the system to calculate the delay time and to automatically compensate for propagation delay. A value of 20 m is set by default.

When using a different type of coaxial cable, please use the "**By Delay**" option. You will need to calculate the delay yourself using the information provided in the product specifications provided by the manufacturer of your coaxial cable.

8 Connecting Your LANTIME System

Important!

- Please ensure that you have read and understood the safety information at the start of this manual before you connect your LANTIME system, and that you perform the procedure in the order listed here.
- This chapter assumes that you already have the requisite antenna infrastructure installed for your LANTIME system. If your LANTIME system has been shipped with a DC power supply, it also assumes that the requisite 5-pin MSTB power cable has been assembled for it by a qualified electrician.

You will need a **flat-blade screwdriver** (blade width 3 mm) and a **grounding conductor cable with a ring terminal** on hand to perform the connection procedure properly.

Procedure

1. Connect the BNC connector from your antenna or signal distributor to the antenna input of your LANTIME system. Twist the male connector in a clockwise direction to lock it into place.

2. Connect the LANTIME system to the relevant router or switch via which the NTP clients will be served using an RJ45 network cable (or via which your LANTIME system may receive the time from another NTP server).

3. Insert the MSTB plug of your power cable into the corresponding connector of your LANTIME system. Tighten the two lock screws of the plug using a Torx T10 screwdriver and test the plug to ensure that it is secure.

4. While the power cable of the LANTIME system provides the primary connection to ground for the system, the chassis itself can also optionally be wired to a grounding busbar to further enhance device safety. If possible, connect the grounding terminal on the housing of your LANTIME system with the bonding busbar of your building using a grounding conductor cable with a ring terminal.

   Refer to Chapter **11.1**, "**Technical Specifications: LANTIME Chassis**", for more information on the location of the grounding terminal.

   The screw, flat washer, and toothed washer required for the attachment of the grounding cable are provided on the grounding terminal of the housing. A grounding conductor is not provided with the device and must be provided by the operator.

   Please ensure that your grounding cable has a thickness of 4 mm^2 - 6 mm^2 and that the cable is properly crimped!

5. Connect the other end of the power cable to your power source. If necessary, switch your power source on.

Assuming that your power source is active, the green "**Power**" LED should light up.

9 Configuring your LANTIME System for Your Network

IPv4 Network Configuration with "startwizard"

After the system has been connected to the power supply and to the receiver antenna, the initial start-up can be started. The device starts immediately after connection to the power supply.

An LANTIME system is shipped with DHCP service enabled on the LAN 0 interface. This means that you have to establish a manual network connection if no DHCP service is installed in your network environment in order to perform system settings via the web interface.

Serial connection with *Basic Configuration Wizard* (LANTIME systems without LCD panel).
After switching on the device, a terminal program (e.g. Putty) can be started after about one minute. Connect the system's serial interface (TERM/CONSOLE) with a null modem cable or a CAB-CONSOLE-RJ45 cable. The settings for the interface must be set to 38400 baud, 8 data bits, no parity and one stop bit (8N1). The terminal emulation must be set to VT100. Computers without serial interface can be connected with a "Serial-to USB" converter.

After connection is established, the prompt for the user ID should be displayed:

```
Welcome to Meinberg LANTIME
login: _
```

Default user: **root**
Default password: **timeserver**
(if necessary, press the enter key again after each entry).

Change with the console to the directory /*wizard*/. The LANTIME Basic Configuration Wizard can now be started with the "startwizard" command.

After successfully starting the Wizard, the following welcome screen will be displayed:

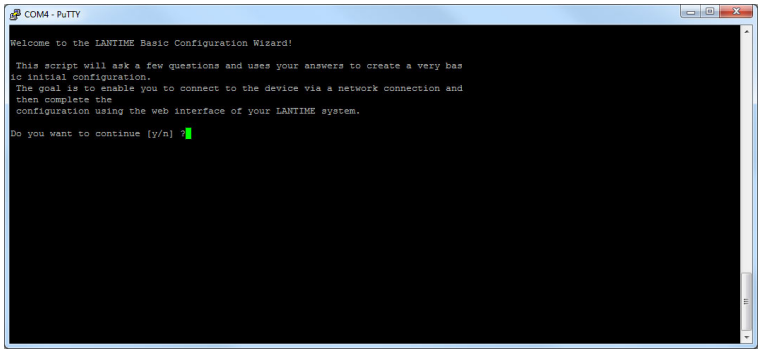

By entering "y" you start the configuration - all further settings can now be made:

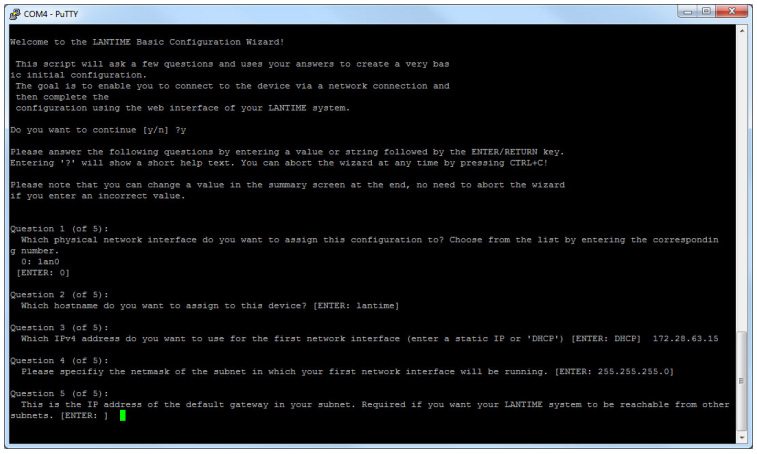

Confirm your settings then.

IPv6 Network Configuration

After you have completed the IPv4 network configuration, you can open the LANTIME web interface via any web browser. Here you can perform your IPv6 configuration in the menu "Network → Network Interfaces → IPv6".

Other Network Considerations

- Please note that UDP port 123 must be left open in your network to allow NTP traffic. This is a standard port that most routers and switches will have open by default, but if your network has a strict whitelisting policy, you may need to configure this manually.
- While the NTP protocol is designed to deal with a certain amount of network jitter, you should configure your managed switch (and any routers) to prioritize NTP traffic via QoS settings if it does not already do so. This will optimize your LANTIME system's performance by keeping latency between the NTP servers and clients consistent.

For further information regarding the network connectivity and network monitoring functions of your LANTIME system, please refer to the
LANTIME OS Configuration and Management Manual, which is available for download from
http://www.mbg.link/docg-fw-ltos.

10 M150 - Front Connectors

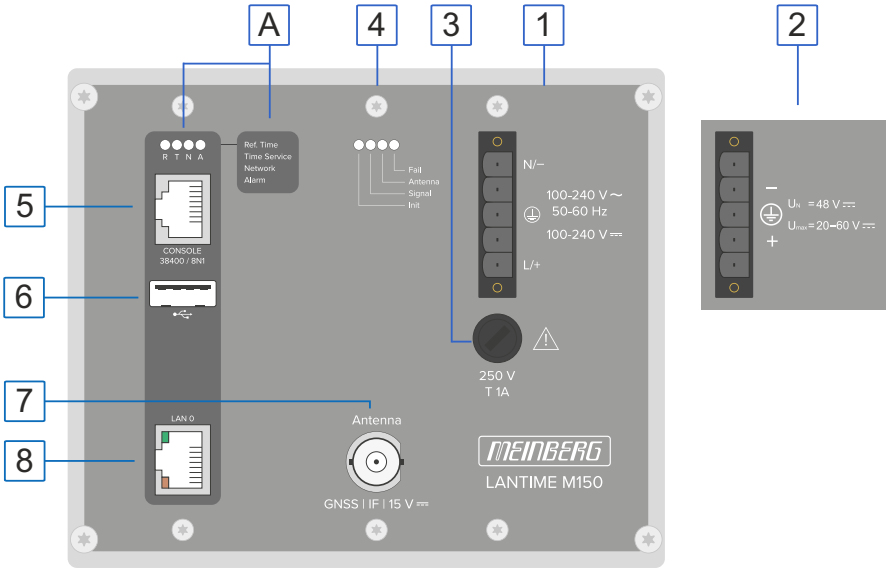

M150/GPS/AD(DC) Power Supply Options:

M150/...	AC/DC power supply U_{max} = 90-264 V~ 100-250 V ⎓
M150/.../DC	DC power supply U_{max}= 20 - 60 V ⎓

A

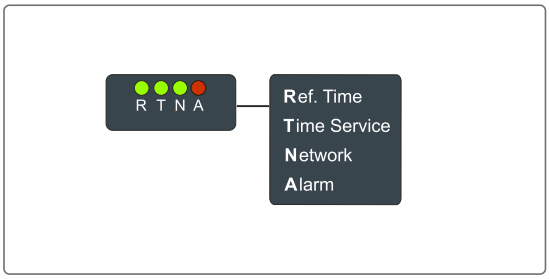

"Ref. Time"

green:	the reference clock (e.g. build-in GPS) provides a valid time
red:	the reference clock does not provide a valid time

"Time Service"

green:	NTP is synchronized to the reference clock, e.g. GPS
red:	NTP is not synchronized or switched to the "local clock"

"Network"

green:	all monitored network interfaces are connected ("Link up")
red:	at least one of the monitored network interfaces is faulty

"Alarm"

off:	no error
red:	general error

10.1 AC/DC Power Connector

Connector Type: 5-Pin MSTB

Pin Assignment:
1: N/-
2: not connected
3: PE (Protective Earth)
4: not connected
5: L/+

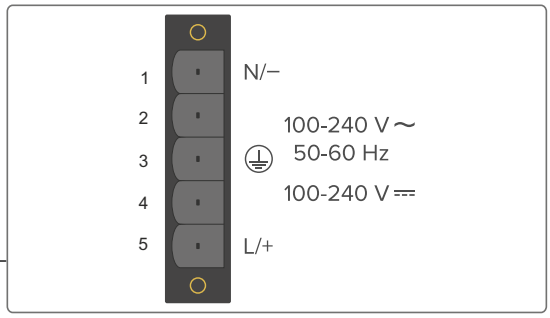

Power Supply Specifications

Rated Voltage Range:	U_N	=	100–240 V~ 100–240 V ⎓
Max. Voltage Range:	U_{max}	=	90–264 V~ 100–250 V ⎓
Rated Current:	I_N	=	0.40 A~
Rated Frequencies:	f_N	=	50–60 Hz
Max. Frequency Range:	f_{max}	=	47–63 Hz
Inrush Current:	I_P	=	20 A @ 230 V AC

Output Specifications

Max. Power:	P_{max}	=	40 W
Max. Heat Output:	E_{therm}	=	144.00 kJ/h (136.49 BTU/h)

Danger!

This equipment is operated at a hazardous voltage.

Danger of death due to electrical shock!

- This device must be connected by qualified personnel (electricians) only.
- Never handle exposed terminals or plugs while the power is on.
- All connectors must provide protection against contact with live parts in the form of a suitable plug body!
- Note: Always ensure that wiring is safe!
- Important: The device must be grounded by means of a connection with a correctly installed protective earth conductor (PE).

10.2 DC Power Connector

Connector: 5pin DFK

Pin Assignment:
1: not connected
2: V_{IN} -
3: PE (Protective Earth)
4: V_{IN} +
5: not connected

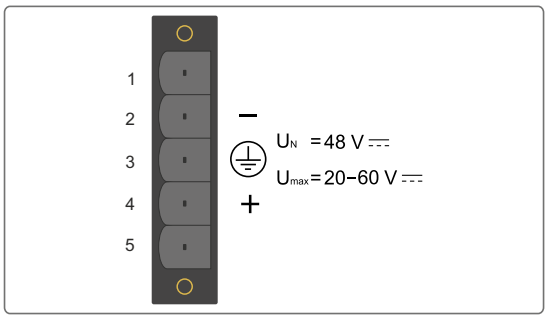

Input Parameter

Nominal voltage range:	U_N	= 48 V ⎓
Maximum voltage range:	U_{max}	= 20 - 60 V ⎓
Nominal current:	I_N	= 0.63 A

Output Parameter

Maximum power:	P_{max}	= 30 W
Maximum heat:	E_{therm}	= 108.00 kJ/h (102.37 BTU/h)

10.3 Fuse

The fuse protects the device from overload and short circuits, and thus prevents damage to the installed power supply. This fuse is accessible from the front panel and can be replaced.

Technical Specifications

Rated Voltage:	250 V
Trigger Delay:	Slow-Blow
Rated Current:	1 A

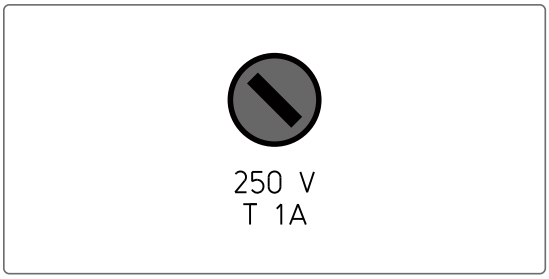

Danger!

Danger of death due to electrical shock!

This equipment is operated at a hazardous voltage.

- The device must be disconnected from the mains! This is done using the physical power switch. Once the power switch is OFF, release the lock screws of the power supply connector and detach the connector.
- Disconnect all signal cables from the device, including antenna, fault message relay contact cables, and serial interfaces.
- Please note the information in the chapter "Important Safety Information -> Replacing the Fuse"

10.4 Status LEDs of the Receiver

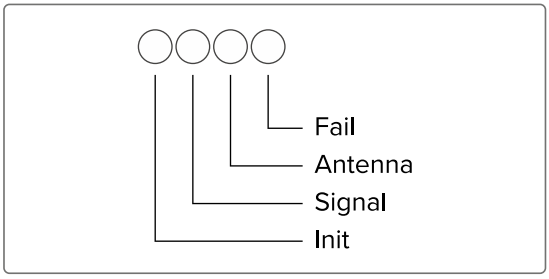

Init

Blue: Clock is initializing

Green: Oscillator is "warmed up" (disciplined)

Signal

Green: Geolocation complete

Antenna

Red: Antenna has a fault, is not correctly connected, or is short-circuited

Green: Antenna is connected and clock is synchronized

Fail

Red: The clock is in free-run mode and is running solely off the oscillator (holdover state)

10.5 Terminal

A serial terminal connection (for certain device models) can be established using the "CONSOLE" RJ45 connector of the LANTIME. The PC can be connected to the time server using a CAB-CONSOLE-RJ45 cable. This terminal connection can be used to perform configuration of the time server via the command line using suitable terminal software such as the HyperTerminal software shipped as standard with the Windows operating system. The terminal software on the PC should be configured to communicate at 38400 baud, 8 data bits, no parity and 1 stop bit, with terminal emulation set to VT100. Once connected to the time server, the login prompt should be displayed (you may need to press RETURN again).

(default user: `root`; password: `timeserver`).

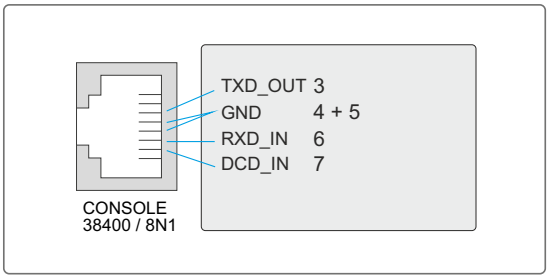

Information:

The RJ45 connector marked "CONSOLE" cannot be used to establish an connection with an Ethernet network. This interface is exclusively used to establish a direct serial connection with terminal software.

10.6 USB Port

All M-series LANTIME devices have a USB interface that allow a USB storage medium such as a flash drive to be connected. USB storage media can be used for the following tasks:

- locking the keys on the local control panel to prevent unauthorized access
- backing up the LANTIME configuration
- transferring configurations between individual LANTIME servers
- copying log files (SyncMon data, for example)
- copying firmware updates to the system
- uploading and downloading secure certificates (SSL, SSH) and passwords

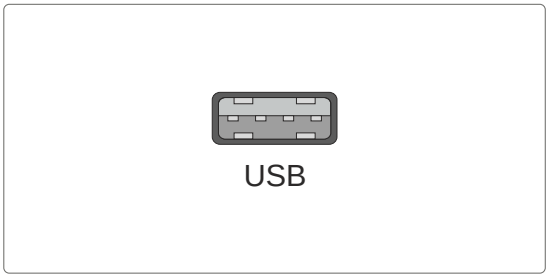

10.7 Antenna Input: GPS Reference Clock

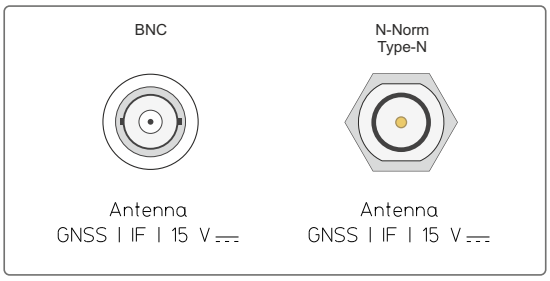

Antenna Input:	Antenna Circuit, Galvanically Isolated
Dielectric Strength:	1000 V
Receiver Type:	12-Channel GPS Receiver
Signal Support:	L1 C/A (1575.42 MHz)
Mixing Frequency: Reference Clock to Antenna (GPS Converter):	10 MHz [1]
Intermediate Frequency: Antenna (GPS Converter) to Reference Clock	35.4 MHz [1]
Voltage Draw of Antenna:	15 V (via Antenna Cable)
Power Consumption of Antenna:	100 mA (via Antenna Cable)
Connection Type:	BNC Female/Type-N Female
Cable Type:	Coaxial Cable, Shielded
Cable Length:	Max. 300 m to RG58, Max. 700 m to RG213

[1] These frequencies are transferred via the antenna cable

Danger!

Do not work on the antenna system during thunderstorms!

Danger of death from electric shock!

- Do not carry out any work on the antenna system or the antenna cable if there is a risk of lightning strike.
- Do not carry out any work on the antenna system if it is not possible to maintain the prescribed safe distance to exposed lines and electrical substations.

10.8 1000BASE-T Gigabit Network Port

Signal	1000BASE-T
Data transmission rate:	10/100/1000 Mbit/s
Connection Type:	8P8C (RJ45)
Cable:	Copper twisted pair
Duplex Modes:	Half/Full/Autonegotiaton

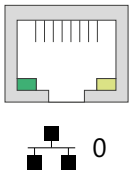

11 Technical Appendix

11.1 Technical Specifications: LANTIME Chassis

Chassis: Extruded housing constructed to be mounted on DIN rail

Chassis Material: Aluminum

Temperature Range

Operation: 0 to +50 °C (32 to 122 °F)

Storage: -20 to +70 °C (-4 to 158 °F)

Relative Humidity

Operation: Max. 85 % (non-condensing)

Altitude

Operation: Max. 2000 m / 6562 ft (above sea level)

Acoustics: 0 dB (A)

IP Rating: IP30

Chassis Dimensions

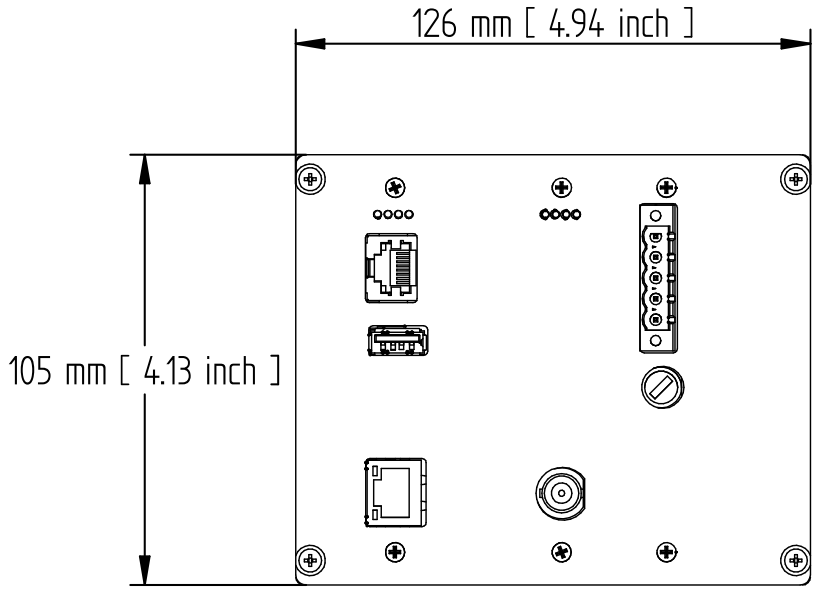

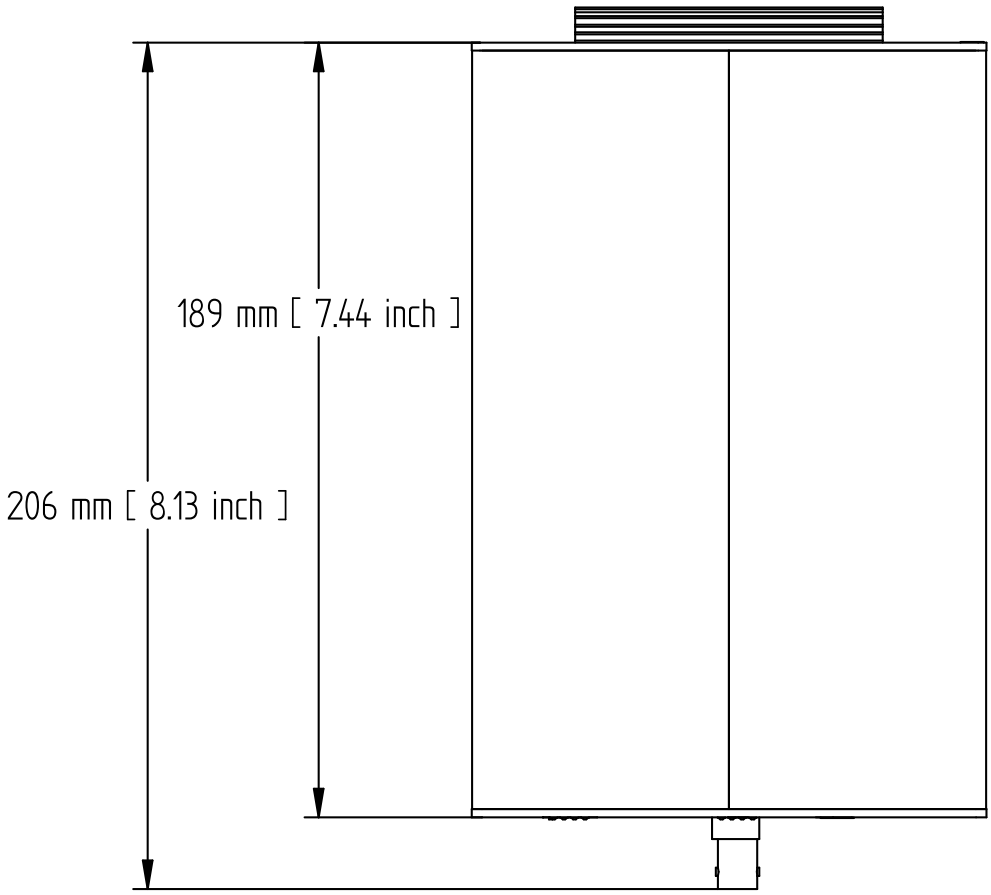

External Ground Terminal on the Chassis

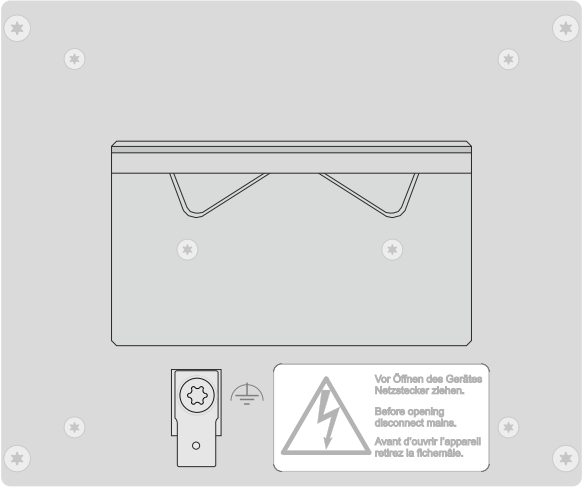

This terminal must be wired to a bonding busbar (grounding busbar). The terminal is located on the side of the chassis with the power supply unit. The parts required to establish this connection—not including the grounding conductor cable itself—are included with the product as shipped.

11.2 Technical Specifications: GPS Antenna and Accessories

Voltage Draw:	15 V (via antenna cable)
Power Consumption:	100 mA (via antenna cable)
Reception Frequency:	1575.42 MHz
Bandwidth:	9 MHz
Mixing Frequency:	10 MHz
Intermediate Frequency:	35.4 MHz
Connector Type:	Type-N, Female
Casing Material:	Injection-Molded ABS Polymer Casing for Outdoor Use
IP Rating:	IP66
Humidity:	95 %
Temperature Range:	–60 °C to +80 °C (–76 °F to 176 °F)
Weight:	1.6 kg including mounting kit

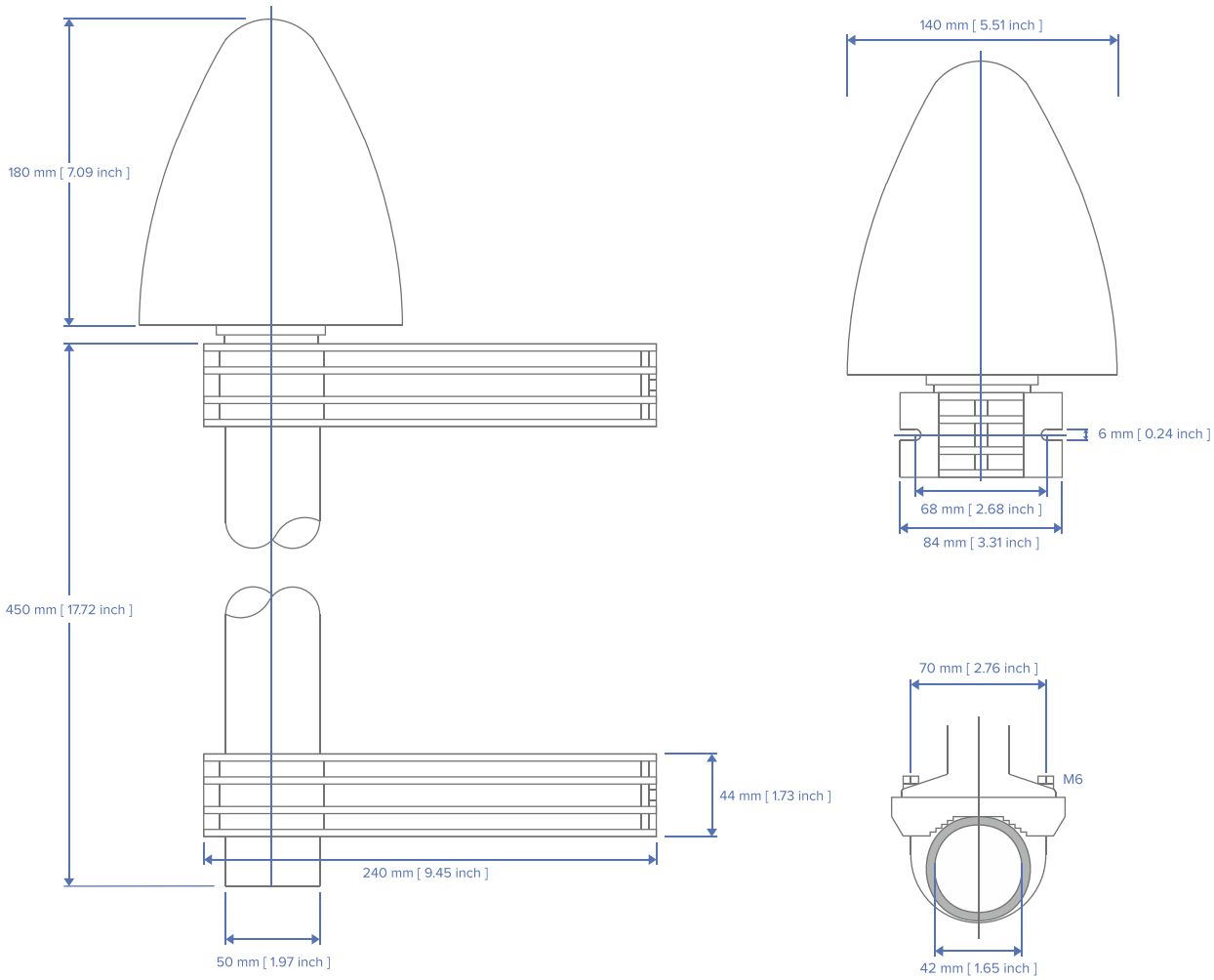

11.3 Technical Specifications: MBG S-PRO Surge Protector

Adapter plug with replaceable gas discharge tube for coaxial signal connections.

Connector Type: Type-N connector female/female. The MBG S-PRO set includes a surge protector (Phoenix CN-UB-280DC-BB), a pre-assembled coaxial cable, and a mounting bracket.

The coaxial cable surge protector must be installed on the antenna line. The shielding is grounded using a conductor that is short as possible. The CN-UB-280DC-BB is equipped with two Type-N female connectors and has no dedicated input/output polarity and no preferred installation orientation.

Phoenix CN-UB-280DC-BB

Features:

- High RF Performance
- Multiple Strike Capability
- 20 kA Surge Protection
- Bidirectional Protection

Installation Method:	Connector Type-Specific Adapter Plug	
Direction of Action:	Line Shield/Earth Ground	
Maximum Continuous Operating Voltage:	UC (Wire-Ground) 195 V AC	280 V DC
Rated Current:	I_N	5 A (25 °C)
Effective Operating Current:	IC at UC	$\leq 1\ \mu A$
Rated Discharge Current:	In (8/20) μs (Core-Earth) In (8/20) μs (Core-Shield)	20 kA 20 kA
Total Surge Current:	(8/20) μs (10/350) μs	20 kA 2.5 kA

Max. Discharge Current:	I_{max} (8/20)μs Maximum (Core-Shield)	20 kA
Rated Pulse Current:	I_{an} (10/1000)μs (Core-Shield)	100 A
Impulse Discharge Current:	(10/350) μs, Peak Value I_{imp}	2.5 kA
Output Voltage Limit:	At 1 kV/μs (Core-Earth) spike At 1 kV/μs (Core-Earth) spike	$\leq$ 900 V $\leq$ 900 V
Response Time:	tA (Core-Earth) tA (Core-GND)	$\leq$ 100 ns $\leq$ 100 ns
Input Attenuation:	aE, asym.	Typically 0.1 dB ($\leq$ 1.2 GHz) Typically 0.2 dB ($\leq$ 2.2 GHz)
Cut-Off Frequency:	fg (3 dB), asym. (Shield) in 50 Ω System > 3 GHz	
Standing Wave Ratio:	VSWR in a 50 Ω System	Typically 1.1 ($\leq$ 2 GHz)
Permissible HF Power:	P_{max} at VSWR = xx (50 Ω System)	700 W (VSWR = 1.1) 200 W (VSWR = ∞)
Capacitance:	(Core-Earth) Asymmetric (Shield)	Typically 1.5 pF Typically 1.5 pF
Surge Current Resistance:	(Core-Earth)	C1 - 1 kV/500 A C2 - 10 kV/5 kA C3 - 100 A D1 - 2.5 kA
Ambient Temperature:	(During Operation)	-40 °C ... 80 °C
Supported Altitude:	$\leq$ 2000 m (above sea level)	
IP Rating:	IP55	
Housing Material:	Nickel-Plated Brass Colored Nickel	
Dimensions:	Height 25 mm, Width 25 mm, Depth 67 mm	
Connection Type:	 IN OUT	Type-N Connector 50 Ω Type-N Connector, Female Type-N Connector, Female
Standards/Regulations:	IEC 61643-21 2000 + A1:2008 EN 61643-21 2001 + A1:2009	

The original product page of the supplier (see link) of the CN-UB-280DC-BB surge protector is the source of the specifications above. Please refer to the manufacturer's product page at the following link for detailed specifications as well as a variety of product-specific documents:

https://www.phoenixcontact.com/online/portal/gb/?uri=pxc-oc-itemdetail:pid=2818850

11.3.1 MBG S-PRO: Physical Dimensions

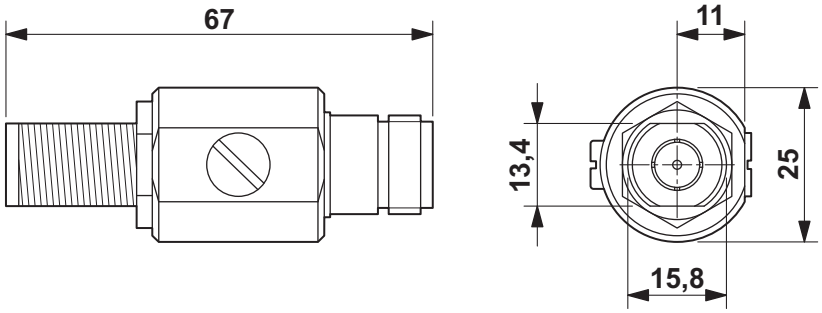

11.3.2 Installation and Grounding

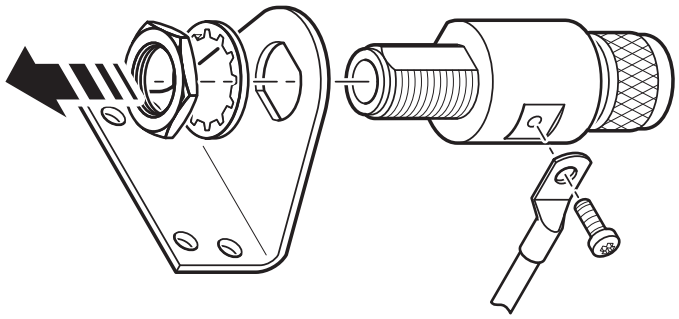

11.4 Technical Specifications: Antenna Cable

The table below shows which coaxial cable types and lengths are supported by Meinberg for each of the receiver types. If you need to purchase a replacement cable at any time, please refer to this table to ensure that you select cable with suitable cutoff frequency and attenuation properties.

Kabeltyp	Laufzeitverzögerung bei 35 MHz (ns/100 m)	Dämpfung bei 35 MHz (dB/100 m)
RG58	503,6	8,48
RG213	185,96	1,28

Please refer to the data sheet of the cable in question for further specifications.

11.5 How Satellite Navigation Works

The use of a receiver for location tracking and time synchronization relies on the ability to measure the satellite-to-receiver propagation delay as precisely as possible. It is necessary to have simultaneous reception from four satellites so that the receiver can determine its relative spatial position in three dimensions (x, y, z) and measure the deviation of its clock against the system clock. Monitoring stations around the planet track the orbital trajectory of the satellites and detect deviations between the local atomic clocks and the system time. The collected data is transmitted up to the satellites, which then send navigation data back to Earth.

The high-precision trajectory data of each satellite, known as the satellite's ephemeris, is needed by the receiver to continuously calculate the precise location of the satellites in space. A roughly defined ephemeridal schedule based on empirical data, referred to as an almanac, is used by a receiver to identify which satellites are visible above the horizon given a specific location and time. Each satellite transmits its own ephemeridal schedule as well as the almanacs of all existing satellites.

Satellite Systems

GPS was installed by the United States Department of Defense (US DoD) and operates at two performance levels: the Standard Positioning Service, or SPS, and the Precise Positioning Service, or PPS. The structure of the messages transmitted by the SPS has been openly published and reception is provided for public use. The timing and navigation data of the more precise PPS is encrypted and is thus only accessible to certain (usually military) users.

GLONASS was originally developed by the Russian military for real-time navigation and ballistic missile guidance systems. GLONASS satellites also send two types of signal: a Standard Precision Signal (SP) and an encrypted High Precision Signal (HP).

BeiDou is a Chinese satellite navigation system. The second-generation system, officially referred to as the BeiDou Navigation Satellite System (BDS) and also known as "COMPASS", consists of 35 satellites. BeiDou entered service in December 2011 with ten satellites and was made available to users in the Asia-Pacific region. The system was completed in June 2020 with the launch of the final satellite.

Galileo is an in-development global European satellite navigation and time reference system controlled by a civilian authority (European Union Agency for the Space Programme, EUSPA). Its purpose is the worldwide delivery of high-precision navigation data and is similarly structured to the American GPS, Russian GLONASS and Chinese BeiDou systems. The main differences in the systems lie in their approaches to frequency usage & modulation and the satellite constellation.

11.5.1 Time Zones and Daylight Saving Time

GPS System Time is a linear timescale that was synchronized with the international UTC timescale (Coordinated Universal Time) when the satellite system became operational in 1980. Since it has entered service, however, several leap seconds have been introduced to the UTC timescale to adjust UTC time to irregularities in the Earth's rotation. While GPS System Time deviates from UTC time by several seconds for this very reason, satellite messages do incorporate the number of seconds by which these timescales deviate from one another, allowing GPS receivers to be synchronized internally with the international UTC timescale.

The receiver's microprocessor can identify any time zone based on UTC time and automatically apply Daylight Saving Time adjustments over several years if so configured by the user.

12 RoHS Conformity

Conformity with EU Directive 2011/65/EU (RoHS)

We hereby declare that this product is compliant with the European Union Directive 2011/65/EU and its delegated directive 2015/863/EU "Restrictions of Hazardous Substances in Electrical and Electronic Equipment".

We warrant that our electrical and electronic products sold in the EU do not contain lead, cadmium, mercury, hexavalent chromium, polybrominated biphenyls (PBBs), polybrominated diphenyl ethers (PBDEs), bis(2-ethylhexyl)phthalat (DEHP), benzyl butyl phthalate (BBP), dibutyl phthalate (DBP), or diisobutyl phthalate (DIBP) above the legal limits.

13 Declaration of Conformity for Operation in the European Union

EU-Konformitätserklärung

Doc ID: LANTIME M150/GPS-April 26, 2023

Hersteller *Manufacturer*	Meinberg Funkuhren GmbH & Co. KG Lange Wand 9, D-31812 Bad Pyrmont

erklärt in alleiniger Verantwortung, dass das Produkt,
declares under its sole responsibility, that the product

Produktbezeichnung *Product Designation*	**LANTIME M150/GPS**

auf das sich diese Erklärung bezieht, mit den folgenden Normen und Richtlinien übereinstimmt:
to which this declaration relates is in conformity with the following standards and provisions of the directives:

RED – Richtlinie *RED Directive* 2014/53/EU	ETSI EN 303 413 V1.2.1 (2021-04)
EMV – Richtlinie *EMC Directive* 2014/30/EU	ETSI EN 301 489-1 V2.2.3 (2019-11) ETSI EN 301 489-19 V2.2.1 (2022-09) EN IEC 61000-6-2:2019 EN IEC 61000-6-3:2021 EN 55032:2015/AC:2016/A11:2020/A1:2020 EN 55035:2017/A11:2020
Niederspannungsrichtlinie *Low Voltage Directive* 2014/35/EU	EN IEC 62368-1:2020/A11:2020
RoHS – Richtlinie *RoHS Directive* 2011/65/EU + 2015/863/EU	EN IEC 63000:2018

EU-Declaration of Conformity

Doc ID: LANTIME M150/GPS-April 26, 2023

Diese EU-Konformitätserklärung umfasst alle nachfolgend aufgeführten Gerätekonfigurationen:
This EU Declaration of Conformity further covers all the device configurations listed below:

LANTIME	M150/GPS M150/GPS/DC

Bad Pyrmont, den April 26, 2023

Stephan Meinberg
Production Manager

14 Declaration of Conformity for Operation in the United Kingdom

UKCA Declaration of Conformity

Doc ID: LANTIME M150/GPS-April 26, 2023

Manufacturer	Meinberg Funkuhren GmbH & Co. KG Lange Wand 9 31812 Bad Pyrmont Germany

declares that the product

Product Designation	**LANTIME M150/GPS**

to which this declaration relates, is in conformity with the following standards and provisions of the following regulations under British law:

Radio Equipment Regulations 2017 (as amended) *SI 2017/1206*	ETSI EN 303 413 V1.2.1 (2021-04)
Electromagnetic Compatibility Regulations 2016 (as amended) *SI 2016/1091*	ETSI EN 301 489-1 V2.2.3 (2019-11) ETSI EN 301 489-19 V2.2.1 (2022-09) EN IEC 61000-6-2:2019 EN IEC 61000-6-3:2021 EN 55032:2015/AC:2016/A11:2020/A1:2020 EN 55035:2017/A11:2020
Electrical Equipment (Safety) Regulations 2016 (as amended) *SI 2016/1101*	EN IEC 62368-1:2020/A11:2020
The Restriction of the Use of Certain Hazardous Substances in Electrical and Electronic Equipment Regulations 2012 (as amended) *SI 2012/3032*	EN IEC 63000:2018

UKCA Declaration of Conformity

Doc ID: LANTIME M150/GPS-April 26, 2023

This UKCA Declaration of Conformity further covers all the device configurations listed below:

LANTIME	M150/GPS M150/GPS/DC

Bad Pyrmont, Germany, dated April 26, 2023

Stephan Meinberg
Production Manager